Uniclass	EPIC
L725111:D4	H32
CI/SfB	
4 (53.9) X	

thermostatic tap specification manual 2012

OPTITHERM™

The optimum in safety and control

HORNE

Solutions brought to you by Hurlstones

contents

This CD contains product specifications, dimensioned drawings, images and 3D animations that explains how the tap is operated, cleaned, maintained and water quality improved.

For further technical specification advice or information please contact us.

If your CD is missing please contact us and request CD ref: L-176

Tel: +44 (0)1505 321455
email: sales@horne.co.uk
web: www.horne.co.uk/optitherm

N.B. This CD will work best if Internet Explorer is set as your default browser.

Horne Engineering Ltd reserves the right to alter any product, design or specification without notice.

A fully rendered 3D animation is available to view on the CD rom above. Please refer to it for a fully guided and narrated tour of the OPTITHERM® Thermostatic tap

OPTITHERM™

introduction

HORNE Engineering have been designing, developing and manufacturing thermostatic valves since 1909.

Over the years we have continually improved and refined thermostatic temperature control technology and its application. Our product portfolio includes a broad range of specialised thermostatic mixing valves and shower valves developed to address the needs of a variety of niche applications. Now our product range has been extended further with the production of our first thermostatic tap – the award-winning* OPTITHERM®.

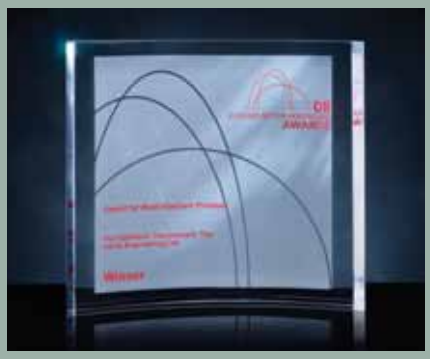

*Best Interiors Product, Building Better Healthcare Awards 2008

The OPTITHERM® tap has an integral Thermostatic Mixing Valve that is certified as Type 3 Approved (TMV3 Scheme Approval number: BC405/0508 and WRAS Approval number: 0806001) in compliance with NHS Model engineering specifications D 08 Thermostatic mixing valves (Healthcare premises) and BS 7942.

the design brief

DESIGN CONCEPT

The OPTITHERM® is a highly specialised thermostatic tap developed principally for healthcare applications. We set out to achieve a design that meets the needs of a variety of users looking for the following key features:

- ease of use
- consistent delivery of safe and comfortable hot water
- easy access for testing and maintenance
- optimised user interface - to enhance hygiene compliance
- easy cleaning for improved hygiene
- robust construction
- compliance with a range of healthcare related regulations and published guidance
- efficient use of energy and water
- minimisation of coldwater dead legs

safe hot water & surface temperatures

The consistent delivery of 'safe' hot water is an essential component in the provision of good healthcare.

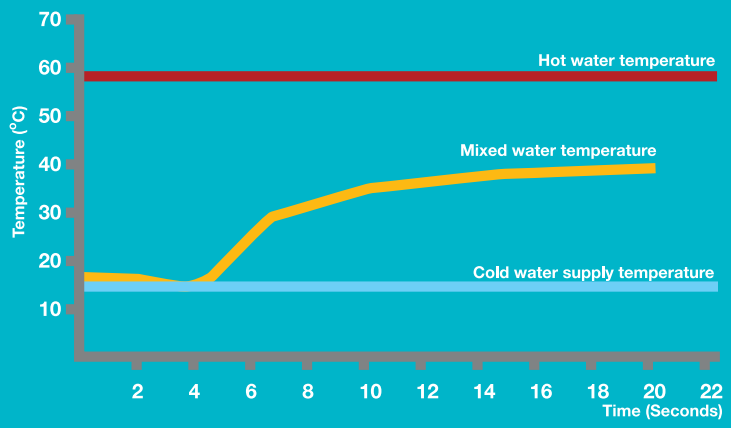

Safe temperature, safe hands

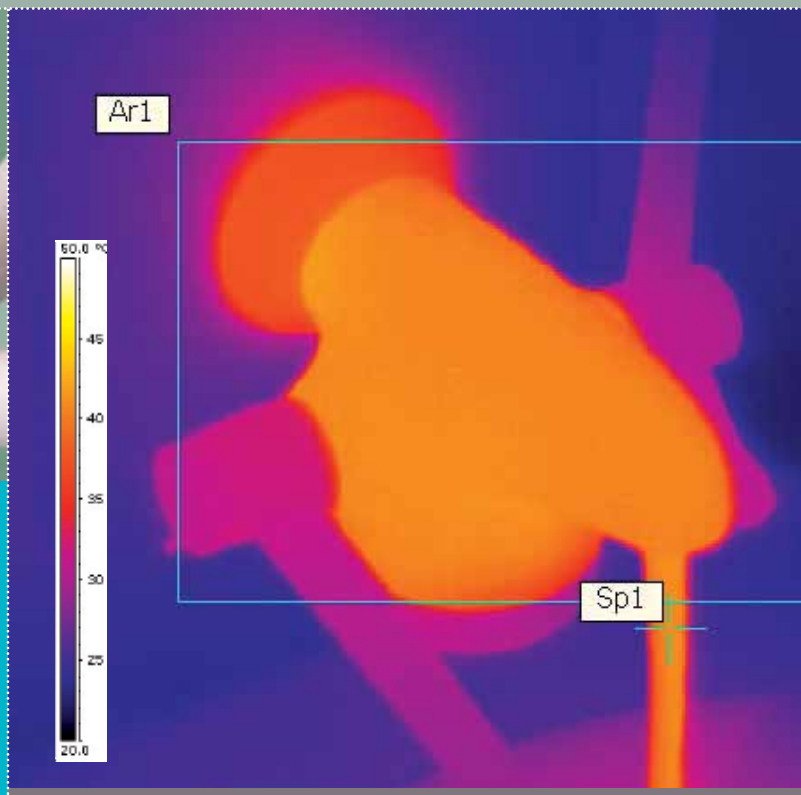

ANALYSIS

Ar1 Min 21.8°C Max 41.8°C Average 33.7°C
Sp1 41.0°C

OPTITHERM® thermal image

SAFE HOT WATER

The Type 3 approved OPTITHERM® mixes hot and cold water immediately prior to the point of discharge and it is essential that the user does not experience transients or excursions in the temperature of the mixed water. It is normal for thermostatic mixing valves to produce transients when starting from ambient as the proportioning device in the mixing valve moves to the desired position. The highly responsive mechanism in the OPTITHERM® produces exceptional performance in this regard as shown on the above graph. Please refer to the CD affixed to the inside front cover for further details.

SAFE SURFACE

The OPTITHERM® should be supplied with hot water at a temperature that will typically be in the range of 55°C – 65°C, which is then mixed with cold water inside the tap to produce mixed water at a safe and comfortable level. It is essential that the temperature of the outer surface of a tap does not become dangerously high during and immediately after periods of operation. The thermal image above demonstrates how the temperature of the outer surface of the OPTITHERM® remains at a safe level during operation.

infection control & hand-washing

Fixtures and fittings used by healthcare staff and patients should be designed wherever possible to contribute to enhanced infection control and perform in a manner that is conducive to maintaining excellent levels of hygiene.

Correct operation prevents re-contamination

Smooth and accessible surface for complete cleaning

USER OPERATION

The manner in which the user makes physical contact with the tap when opening and closing the flow is recognised as a particularly important feature of a hospital tap. Our unique double lever option allows for the lever to be pushed on using a single thumb (A) but, crucially, after hand washing, the elbow or upper forearm is used, again in a pushing forward movement (B), to close the flow keeping the hands away from the face and hair. Wherever possible we have made the user interface as easy and intuitive as possible. An integral flow regulator and laminar flow conditioner ensures that water is delivered in a controlled manner (6 l/m) as opposed to a splashing surge, which again gives a more user friendly result, that is conducive to good hand washing practice.

EASE OF CLEANING

The OPTITHERM® has been designed to ensure that all areas of the outer surface of the product are highly accessible for easy and effective cleaning. There are also no parts that can be prised off leaving recesses, which can harbour dirt and pathogens. The enclosed CD explicitly shows the outer surface of the OPTITHERM® and how it can be easily accessed for thorough and effective cleaning.

We recommend a single-use cleaning cloth be used to clean the Optitherm tap and a separate, single-use cloth for cleaning the basin.

installation & commissioning

A complete and effective commissioning procedure will help to ensure the correct operation of the hot and cold water systems.

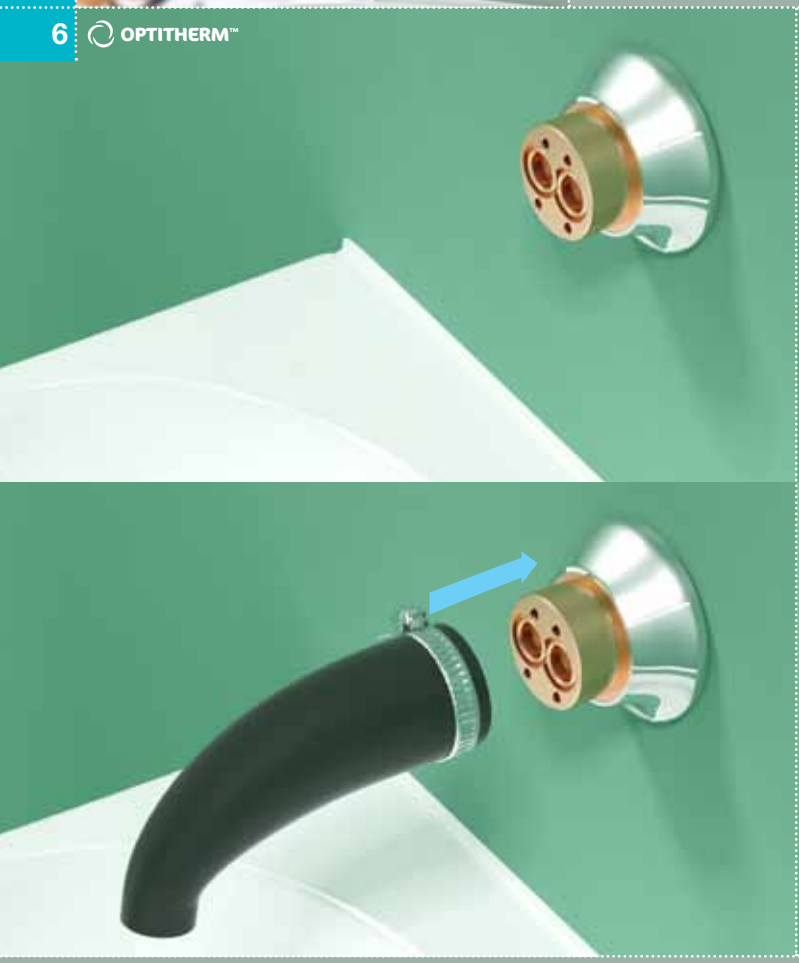

Flush pipework after spigot installation

Fit and commission during final fit-out

INSTALLATION

Installation of the OPTITHERM® is particularly easy and can be achieved in two stages. The spigot can be installed at the same time as the water supply pipe work and wall panelling.

A Flushing kit (part number 5640) fits over the spigot such that, in accordance with Water Supply (water fitting) Regulations, pipe work flushing can be carried out as soon as water is available on site. This spigot mounted flushing kit also better facilitates the required thermal and chemical disinfection of the hot and cold water system before the tap body is connected to the spigot.

COMMISSIONING

The OPTITHERM® tap assembly may be fitted to the spigot and commissioned during the final build phase. This greatly reduces the risk of damage or contamination to the tap, which is often sustained as plastering and painting etc. is carried out around the wash hand basin. In any case the OPTITHERM® can only be properly commissioned once hot water is available and this is very often only in the latter stages of the build programme.

We recommend the current commissioning instructions be followed including thermal disinfection of the tap's internal surfaces (detailed on page 8).

performance testing & maintenance

In order to achieve consistent and accurate performance over a maximised operational lifespan, the product should be designed in such a way that facilitates easy access for routine testing and maintenance.

Isolation valves are accessed under the tap spigot

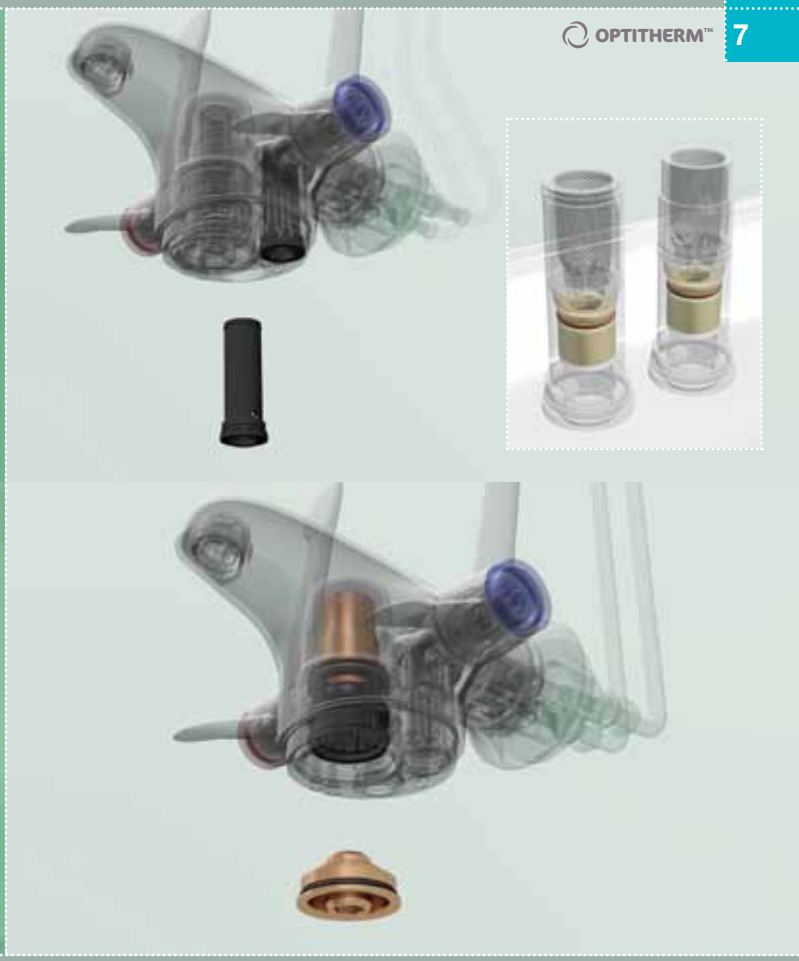

Internal components are all easily accessible for maintenance

ACCESSIBILITY

By virtue of the fact that the thermostatic control is integral to the tap, it is easily accessed by facilities management staff in possession of the correct tools and equipment (see accessories on page 11). The OPTITHERM® features integral isolation valves, which are accessible without moving the tap or any panelling, and are used when testing thermostatic control performance and safety. The CD supplied with this literature features a narrated animation showing this feature and how other key components, such as the strainers and the thermostatic cartridge, are accessed for cleaning and maintenance.

STRAINER

Hot and cold strainer and check valve cartridges are accessible for routine cleaning – the strainer basket is removable to aid rinsing and disinfection.

THERMOSTATIC CARTRIDGE

The thermostatic cartridge is easily removed when due for repair or replacement (we recommend every 3 years).

water system management – thermal regime

The product should be so designed to facilitate best practice water system management with respect to microbiological contamination.

Simple and effective flushing and sampling procedure

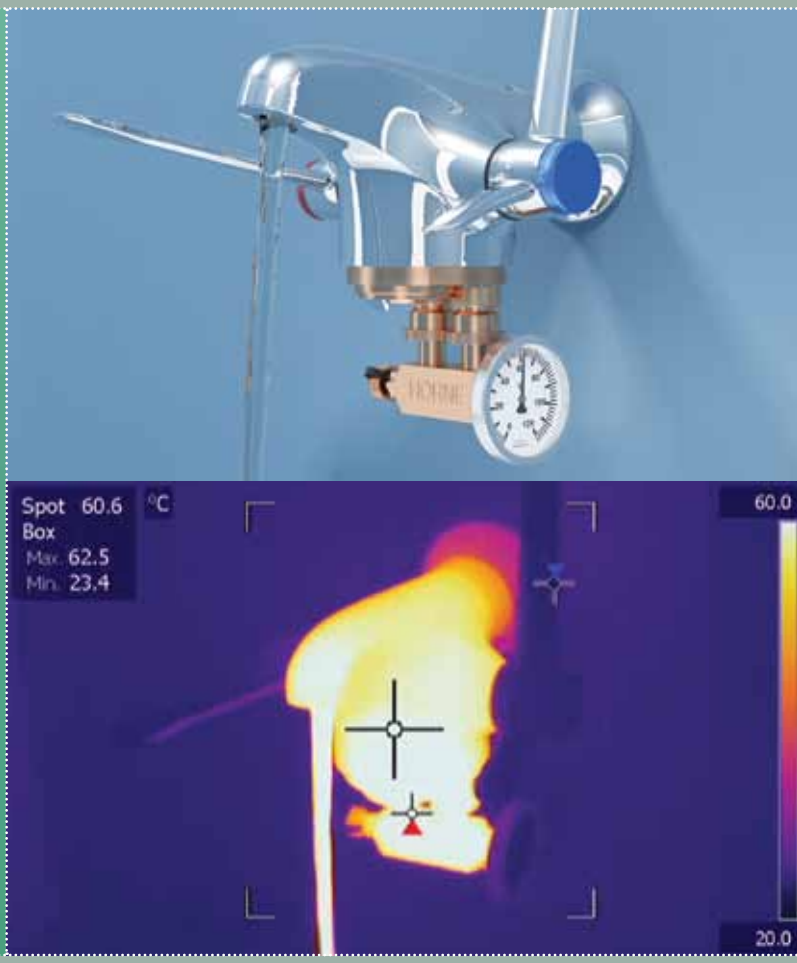

Thermal disinfection of the OPTITHERM® thermostatic tap

TESTING AND SAMPLING

An additional Flushing Kit (part no. 5492) allows for routine water supply temperature testing and sampling for micro-biological analysis. We also recommend routine pipe work flushing at higher velocity, which shears excess biofilm from the pipe walls and removes it to drain - thus improving water quality. The CD at the front of this brochure features animations that fully illustrate this routine pipe work flushing process.

THERMAL DISINFECTION

The OPTITHERM®'s Thermal Disinfection Adaptor (TDA) allows the thermal regime to be extended right down to the point of water discharge. The thermal image above shows how, during the disinfection process, the surface temperature of the tap increases to system temperature and in doing so its internal surfaces become sanitised. A narrated animation contained in the enclosed CD fully illustrates this disinfection process.

options

Fixtures and fittings used by healthcare staff and patients should be designed wherever possible to contribute to enhanced infection control and perform in a manner that is conducive to maintaining excellent levels of hygiene.

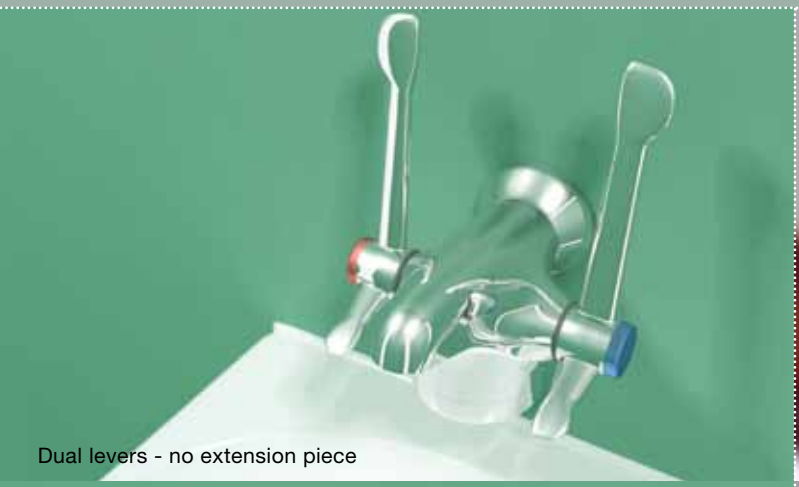

Dual levers - no extension piece

Dual levers - 30mm extension piece

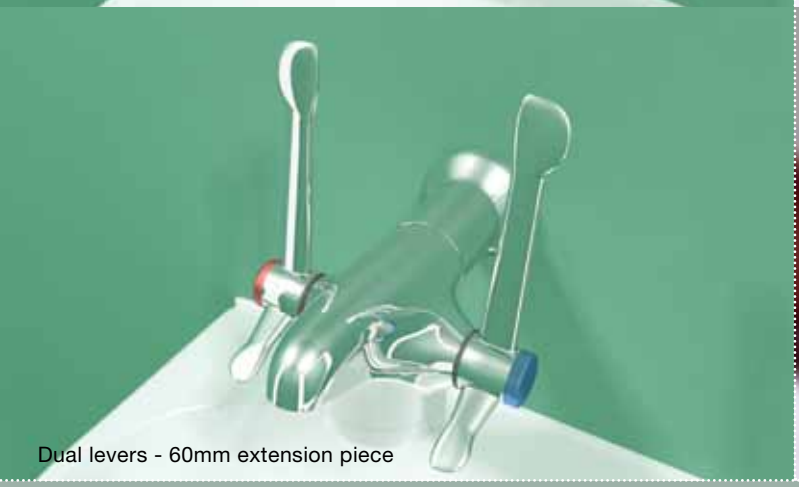

Dual levers - 60mm extension piece

Short levers - 30mm extension piece

OPTIONS

The OPTITHERM® can be installed with our unique dual levers or with short levers as required. The location of the point of discharge can be modified by the inclusion of extension pieces.

It is important that water does not fall directly into the plughole and the extension pieces give the designer and installer scope to make the OPTITHERM® ideally compatible with the selected wash hand basin.

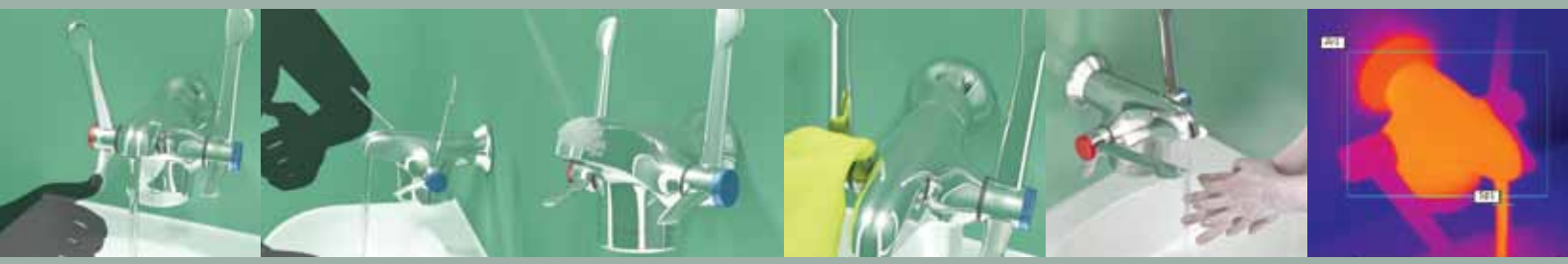

The strip of images above are taken from the fully-narrated 3D-animated OPTITHERM® CD-ROM on the inside front cover of this brochure.

tap dimensions/CAD drawings

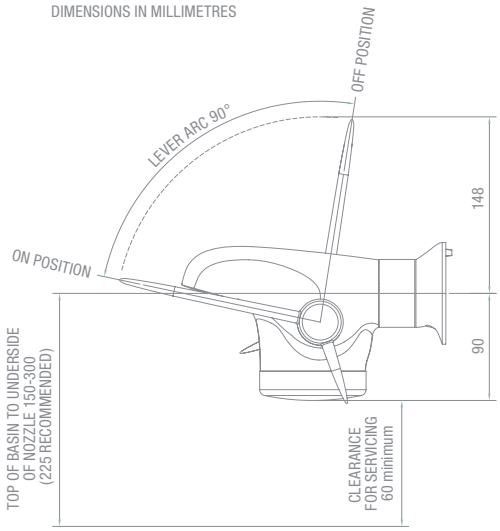

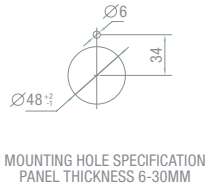

MOUNTING HOLE SPECIFICATION
PANEL THICKNESS 6-30MM

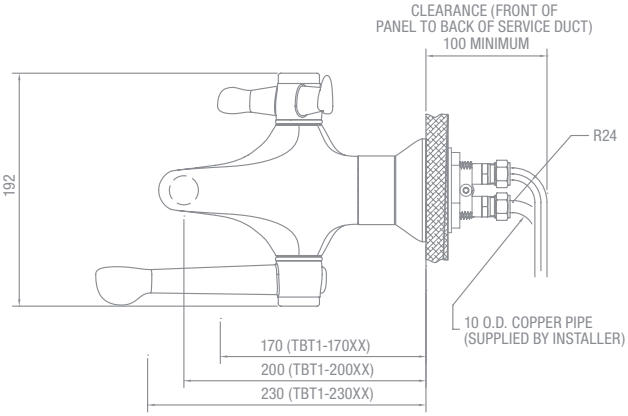

Product references -

Full specification clauses for each of the OPTITHERM® configurations below can be found on the CD-ROM on the inside front cover of this brochure

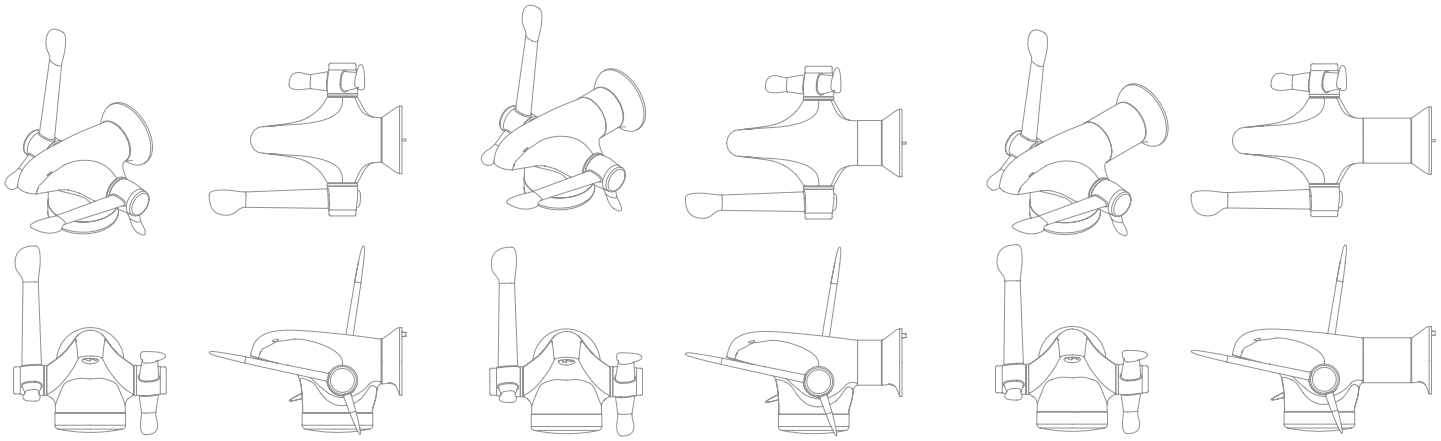

TBT1-170DL

No extension piece, dual levers

TBT1-200DL

30mm extension piece, dual levers

TBT1-230DL

60mm extension piece, dual levers

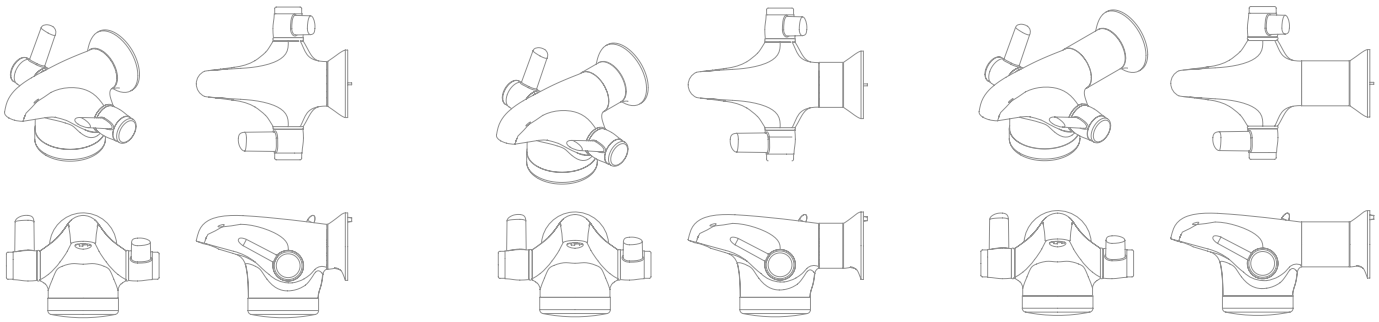

TBT1-170SL

No extension piece, short levers

TBT1-200SL

30mm extension piece, short levers

TBT1-230SL

60mm extension piece, short levers

Further Reading

Health Technical Memorandum 04-01: *'The Control Of Legionella, Hygiene, "Safe" Hot Water, Cold Water And Drinking Water Systems: Part A Design, Installation And Testing', 2006.*

Health Technical Memorandum 04-01: *'The Control Of Legionella, Hygiene, "Safe" Hot Water, Cold Water And Drinking Water Systems: Part B Operational Management', 2006.*

www.epic.tvu.ac.uk *Epic II Guidelines.*

Health Guidance Note, "*Safe" Hot Water And Surface Temperatures. NHS Estates*

Health Technical Memorandum 64, *'Sanitary Assemblies', 3rd ed., 2006*

Infection Control Nurses' Association, *'Hand Decontamination Guidelines'.*

Infection Control in the Built Environment: *Design and Planning. NHS Estates, 2003.*

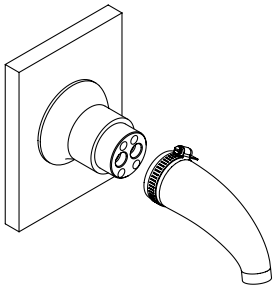

Spigot Flushing Kit

PART No 5640

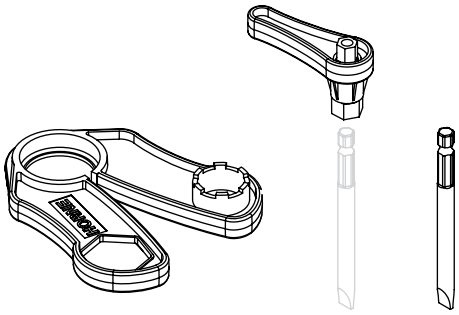

Multitool

PART No 5459 PART No 5632

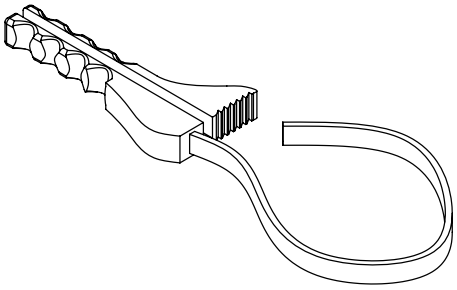

Strap Wrench

PART No 5457

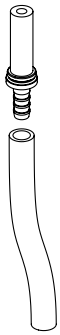

Flushing/Sampling Kit

PART No 5492

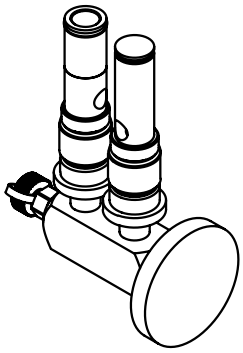

Thermal Disinfection Adaptor

PART No 5963

Water Quality Compliance Kit

PART No 6006

A special toolkit (part no. 5491) is available to aid maintenance of the OPTITHERM® tap and includes the following items (some pictured above):

- Multi-tool plus screwdriver bit
- 2 No. hex keys
- 1 no. Torx T20 key
- Strap wrench
- Thermostatic cartridge removal tool
- Flushing/Sampling kit
- Oil bottle

An additional Kit (part no. 6006) to aid compliance with respect to water quality comprises a Flushing/Sampling Kit and Thermal Disinfection Adaptor in a sturdy carrying case.

Solutions...
brought
to you
by Hurlstones

HORNE

HORNE ENGINEERING Ltd
PO Box 7, Rankine Street
Johnstone, United Kingdom PA5 8BD
tel +44 (0)1505 321455
fax +44 (0)1505 336287
email sales@horne.co.uk
web www.horne.co.uk

Patented:
Dual Lever Action AU2006-327948, DE1963724, DK1963724, FR1963724, GB1963724, HK1115623, IT1963724, SE1963724;
Integrated TMV with dedicated cold control AU2006-327944, DE1963723, DK1963723, FR1963723, GB1963723, HK1115624, IT1963723, SE1963723;
Integrated TMV serviceability features AU2010-206073, DE1965109, FI1965109, GB1965109, HK1115625B, NL1965109, SE1965109, US8,020,779.

Patents Pending:
Dual Lever Action CA2673780, US12/158005;
Integrated TMV with dedicated cold control US12/097983;
Integrated TMV serviceability features HK08111319.3.

Design Registrations:
Mixing Taps (part of -) EU 000612585-0001 to 0007, EU000451489-0001 to 0003.

Issue 5, May 2012. Brochure Ref L-175.
Printed on recycled paper.
Brochure produced by www.colinbarrows.co.uk
3D modelling produced by www.showthempictures.com